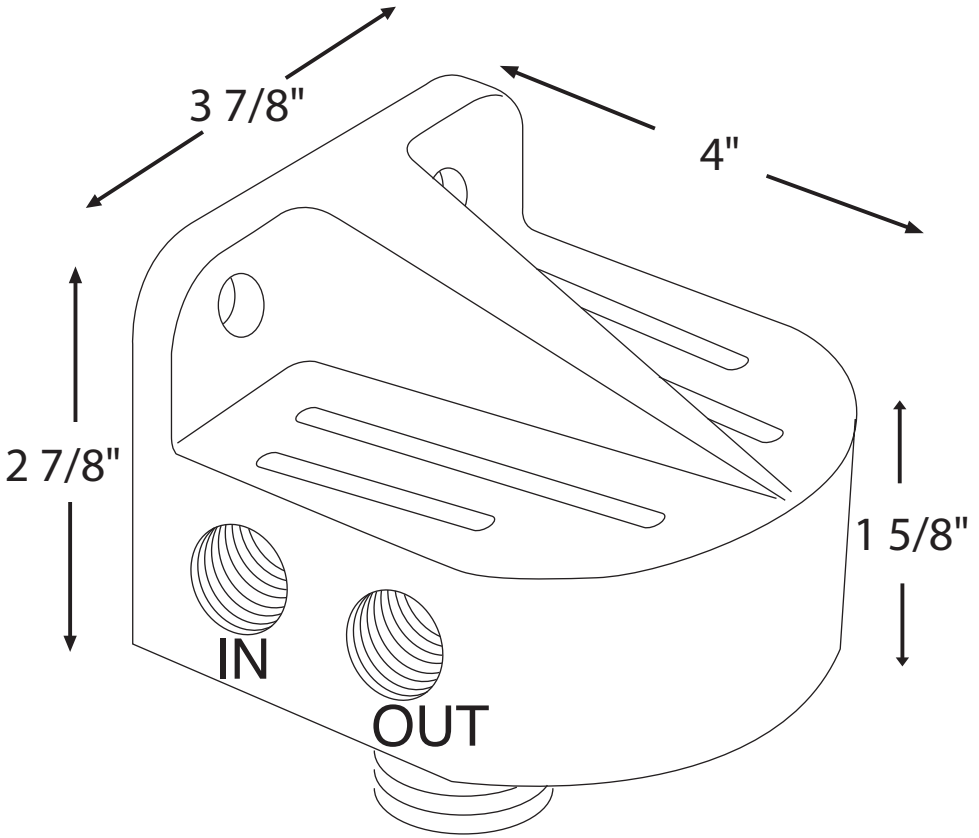

Eddie MARINE, INC. SERVICE, QUALITY AND AFFORDABILITY
11479 Sixth Street, Rancho Cucamonga, CA 91730 • 909-945-2830 • Fax 909-945-9293 www.eddiemarine.com