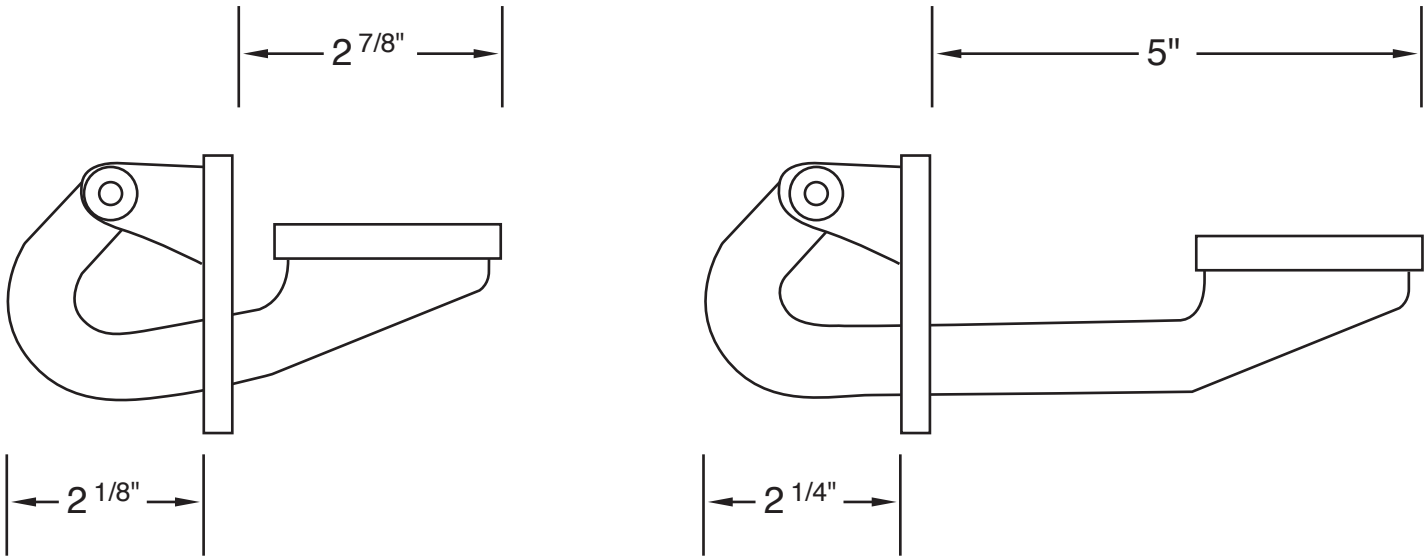
2 7/8"
5"
2 1/8"
2 1/4"